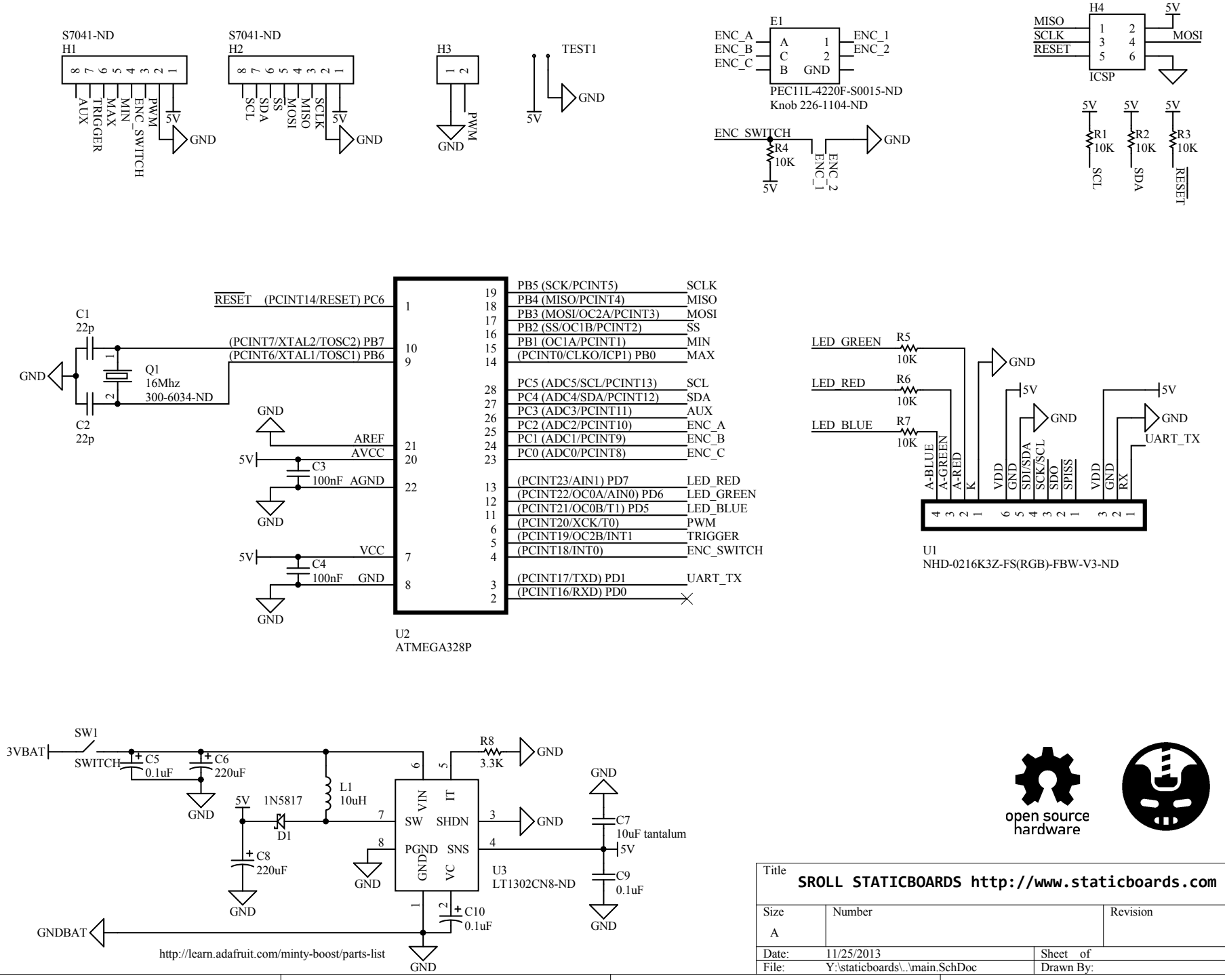
S7041-ND
H1
AUX
TRIGGER
MAX
MIN
ENC_SWITCH
PWM
5V
GND
S7041-ND
H2
SCL
SDA
SS
MOSI
MISO
SCLK
5V
GND
H3
PWM
GND
TEST1
5V
GND
E1
ENC_A
ENC_B
ENC_C
A
C
B
GND
ENC_1
ENC_2
PEC11L-4220F-S0015-ND
Knob 226-1104-ND
ENC_SWITCH
R4
10K
5V
ENC_1
ENC_2
GND
H4
MISO
SCLK
RESET
MOSI
ICSP
5V
R1
10K
SCL
R2
10K
SDA
R3
10K
RESET
C1
22p
C2
22p
GND
Q1
16Mhz
300-6034-ND
RESET (PCINT14/RESET) PC6
(PCINT7/XTAL2/TOSC2) PB7
(PCINT6/XTAL1/TOSC1) PB6
AREF
AVCC
AGND
VCC
GND
C3
100nF
C4
100nF
5V
PB5 (SCK/PCINT5) SCLK
PB4 (MISO/PCINT4) MISO
PB3 (MOSI/OC2A/PCINT3) MOSI
PB2 (SS/OC1B/PCINT2) SS
PB1 (OC1A/PCINT1) MIN
(PCINT0/CLKO/ICP1) PB0 MAX
PC5 (ADC5/SCL/PCINT13) SCL
PC4 (ADC4/SDA/PCINT12) SDA
PC3 (ADC3/PCINT11) AUX
PC2 (ADC2/PCINT10) ENC_A
PC1 (ADC1/PCINT9) ENC_B
PC0 (ADC0/PCINT8) ENC_C
(PCINT23/AIN1) PD7 LED_RED
(PCINT22/OC0A/AIN0) PD6 LED_GREEN
(PCINT21/OC0B/T1) PD5 LED_BLUE
(PCINT20/XCK/T0) PWM
(PCINT19/OC2B/INT1 TRIGGER
(PCINT18/INT0) ENC_SWITCH
(PCINT17/TXD) PD1 UART_TX
(PCINT16/RXD) PD0
U2
ATMEGA328P
LED_GREEN
LED_RED
LED_BLUE
R5
10K
R6
10K
R7
10K
GND
5V
UART_TX
A-BLUE
A-GREEN
A-RED
K
VDD
GND
SDI/SDA
SCK/SCL
SDO
SPISS
VDD
GND
RX
U1
NHD-0216K3Z-FS(RGB)-FBW-V3-ND
SW1
3VBAT
SWITCH
C5
0.1uF
C6
220uF
GND
5V
1N5817
D1
L1
10uH
C8
220uF
GND
R8
3.3K
GND
VIN
IT
SW
SHDN
PGND
SNS
GND
VC
U3
LT1302CN8-ND
C7
10uF tantalum
5V
C9
0.1uF
C10
0.1uF
GNDBAT
http://learn.adafruit.com/minty-boost/parts-list
open source
hardware
Title
SROLL STATICBOARDS http://www.staticboards.com
Size
A
Number
Revision
Date: 11/25/2013
Sheet of
File: Y:\staticboards\..\main.SchDoc
Drawn By: